Unit 4

Quantum Communication and Computing – Theoretical Perspective

Quantum vs Classical Information, Basics of Quantum Communication, Quantum Key Distribution (QKD),Role of Entanglement in Communication, The Idea of the Quantum Internet – Secure Global Networking, Introduction to Quantum Computing, Quantum Parallelism (Many States at Once),Classical vs Quantum Gates, Challenges: Decoherence and Error Correction, Real-World Importance and Future Potential

- Quantum communication and computing revolutionize information processing and security by exploiting quantum mechanics.
- Unlike classical bits, quantum bits (qubits) can exist in superpositions and show entanglement.
- Theoretical principles underpin the design and analysis of quantum systems, supporting quantum algorithms and secure communication such as Quantum Key Distribution.
- In quantum communication, entanglement and the no-cloning theorem ensure security, while quantum computing leverages quantum mechanics for tasks beyond classical reach, relying on specialized gates, circuits, and error correction.
- This theoretical framework guides the development and addresses challenges like decoherence, scalability, and fault tolerance.

4.1 Quantum vs Classical Information

- Classical information is encoded using bits, which take values 0 or 1, and all classical computing manipulates these bits using logic gates.
- Shannon's classical information theory quantifies data in bits, following deterministic rules, and allows for reliable copying, measurement, and transmission over channels like fiber optics or radio waves

- Quantum information differs fundamentally from classical information by using qubits, which can exist in multiple states simultaneously (superposition) and exhibit entanglement, creating correlations impossible with classical bits.
- While classical information is stable, easily copied, and well understood, quantum information is fragile, altered by measurement, and cannot be cloned due to quantum principles.
- Quantum information enables vastly more powerful computation and encryption but faces challenges in control and coherence, distinguishing it from the deterministic and scalable nature of classical information.

4.1.1. Representation of Information

- Classical: Information is represented using bits, which take values of either 0 or 1. All classical systems and digital devices operate using binary states and logic gates like AND, OR, and NOT.
- Quantum: Information is represented using qubits, which can be in state 0, 1, or a superposition of both. A qubit's state is described by a complex probability amplitude, allowing parallelism in computations.

4.1.2. Superposition and Parallelism

- **Classical**: A bit can only be in one state at a time—either 0 or 1. Computation must evaluate each possibility sequentially (unless using parallel processors).
- **Quantum**: Due to superposition, qubits can represent multiple states simultaneously. A quantum computer with n qubits can theoretically represent 2^n states at once, offering exponential computational power for specific problems.

4.1.3. Entanglement

- **Classical**: Bits operate independently. The state of one bit does not affect another unless explicitly connected via logic operations.
- **Quantum**: Qubits can become entangled, meaning the state of one qubit directly affects the state of another, even over long distances. This allows for powerful correlations used in quantum algorithms and quantum teleportation.

4.1.4. Measurement and Observation

- **Classical: Measuring a classical bit simply reveals its value (0 or 1), and the bit remains unchanged by the observation.**
- **Quantum: Measuring a qubit collapses its superposition to a single classical state (0 or 1), altering its original state. This makes observation destructive and requires careful design of quantum algorithms.**

4.1.5. Information Copying and Cloning

- **Classical: Bits can be freely copied without altering the original data. Data backup, replication, and transmission are straightforward.**
- **Quantum: The no-cloning theorem states that it is impossible to make an exact copy of an arbitrary unknown quantum state. This protects data in quantum cryptography but complicates quantum communication and computation.**

4.1.6. Error Correction and Stability

Classical: Error correction is mature and well-developed using redundancy, parity bits, and error-correcting codes.

Quantum: Qubits are fragile and prone to decoherence (loss of quantum behavior due to environmental noise). Quantum error correction is an active area of research and requires complex strategies like surface codes.

4.1.7. Computational Power

Classical: Classical computers excel at general-purpose tasks and are extremely efficient for most everyday computing needs.

Quantum: Quantum computers outperform classical ones in specific tasks like factoring large numbers (Shor's algorithm), searching unsorted data (Grover's algorithm), and simulating quantum systems. However, they are not universally superior and are currently limited by hardware constraints.

4.1.8. Communication and Security

Classical: Classical communication channels are vulnerable to eavesdropping but are protected using encryption schemes based on mathematical hardness assumptions.

Quantum: Quantum communication enables quantum key distribution (QKD), which ensures secure communication that is provably resistant to interception due to the laws of quantum physics.

4.1.9. Physical Implementation

Classical: Bits are implemented using voltage levels in transistors. Devices are stable, mass-producible, and energy-efficient.

Quantum: Qubits are realized using various physical systems—superconducting circuits, trapped ions, photons, or spins. Each has trade-offs in terms of scalability, coherence time, and ease of control.

4.1.10. Development and Maturity

Classical: Classical computing is a mature field with decades of progress, large-scale infrastructure, and global adoption.

Quantum: Quantum computing is still emerging, with progress accelerating in both academia and industry. While small-scale quantum systems exist, building fault-tolerant, scalable machines is a major challenge.

4.2 Basics of Quantum Communication

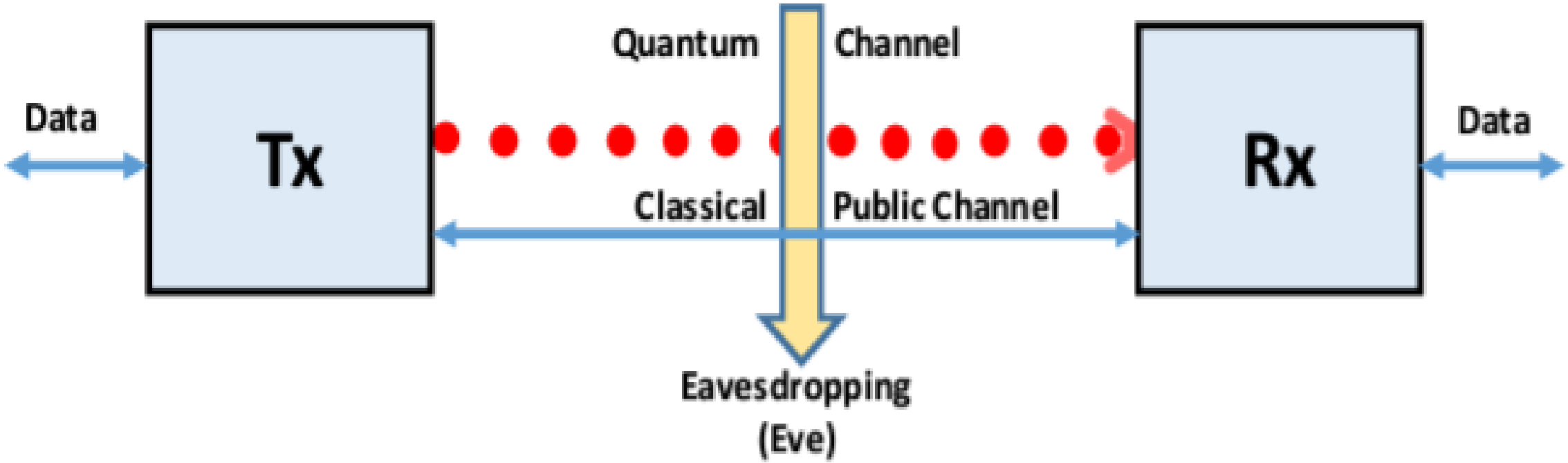

Quantum Channel	Classical public channel
Secure key generation & distribution	Encrypted Communication

- Quantum communication uses the principles of quantum mechanics—such as superposition and entanglement—to encode and transmit information via qubits, typically realized by photons.
- Unlike classical communication, which relies on bits represented by electrical signals or light pulses, quantum communication's fundamental security benefit comes from the fact that any measurement or interception of a qubit disturbs its state, making eavesdropping detectable.
- This approach enables new applications like quantum key distribution for secure data transmission, quantum internet, and distributed quantum computing. However, the technology faces challenges with long-distance communication due to photon loss and quantum state fragility, which are being addressed through advancements like quantum repeaters.

- **Definition: Quantum communication is the process of transferring information using quantum states such as qubits, often carried by photons.**
- **Security: Inherent security arises because quantum states cannot be measured or cloned without altering them (Heisenberg Uncertainty Principle and No-Cloning Theorem).**
- **Medium: Photons are typically used for quantum communication because they travel at the speed of light and are less prone to environmental noise.**
- **Applications: Includes secure data transmission, quantum internet, satellite communication, and distributed quantum computing.**
- **Challenges: Quantum signals degrade over long distances due to photon loss and decoherence. Solutions like quantum repeaters are under research.**

4.3. Quantum Key Distribution (QKD)

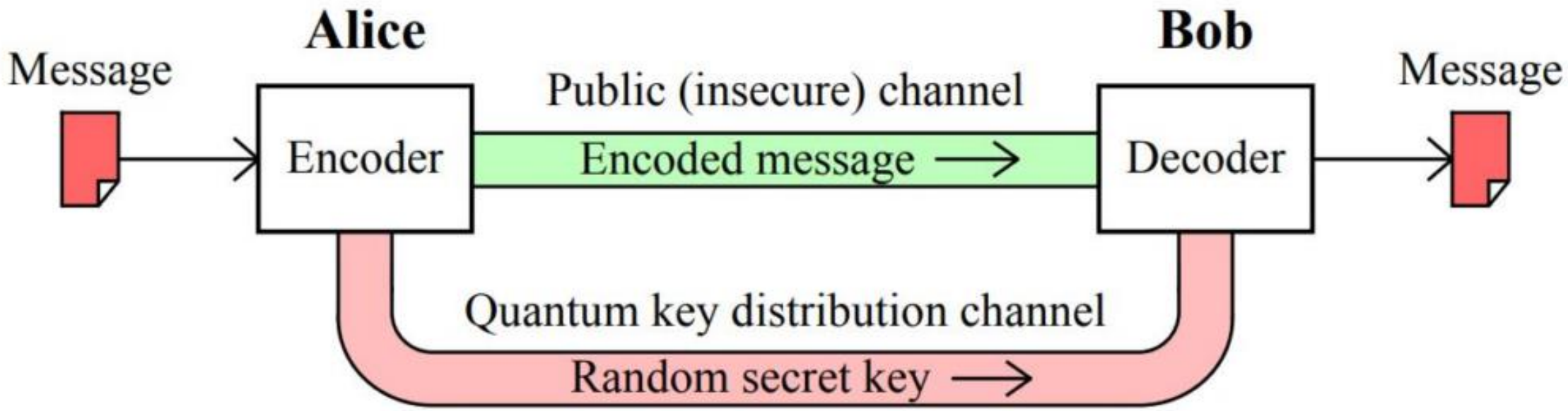
Alice
Bob
Message
Encoder
Public (insecure) channel
Encoded message
Decoder
Message
Quantum key distribution channel
Random secret key

- **Quantum Key Distribution (QKD) is a pioneering application of quantum communication that enables two parties to securely share a secret key, detecting any potential eavesdropper in the process.**
- **The BB84 protocol, introduced by Bennett and Brassard in 1984, uses photon polarization to encode quantum bits. Any measurement by an eavesdropper disturbs the qubits, introducing detectable errors.**
- **After transmission, both parties compare a subset of their measured bits; if the observed error rate is below a certain threshold, the key is deemed secure.**
- **QKD's security comes from quantum physics, not computational assumptions, and is already deployed in fields like banking and government for ultra-secure communications**

Steps in QKD:

- 1. Quantum Transmission – Qubits are sent via a quantum channel.
- 2. Measurement and Sifting – Receiver measures qubits and compares part of the data.
- 3. Error Checking – Public comparison detects eavesdropping.
- 4. Key Extraction – A shared secret key is derived using only verified bits.

4.4. Role of Entanglement in Communication

- **Entanglement is a central phenomenon in quantum mechanics, creating powerful correlations between qubits that enable advanced communication protocols.**
- **When two qubits are entangled, measuring one instantly determines the state of the other, no matter their separation.**
- **This property underpins quantum teleportation, allowing a quantum state to be perfectly transferred across distance without moving the particle itself.**

- **Entanglement** is also fundamental for device-independent Quantum Key Distribution (QKD), ensuring communication security even if the devices are untrusted, and enables entanglement swapping, which links distant nodes for building quantum networks and the quantum internet.
- However, maintaining entanglement over long distances is challenging due to noise and decoherence, making the creation of robust, long-lived entangled pairs a key research focus today.

4.5. The Idea of the Quantum Internet – Secure Global Networking

The quantum network consists of K source quantum nodes, A_i, $i = 1, ..., K$, and K receiver quantum nodes (depicted by blue nodes); B_i, $i = 1, ..., K$, and a set of intermediate quantum repeaters (depicted by gray nodes in the clouds); R_i, $i = 1, ..., q$, between the sender and receiver quantum nodes; and satellites with free-space channels.

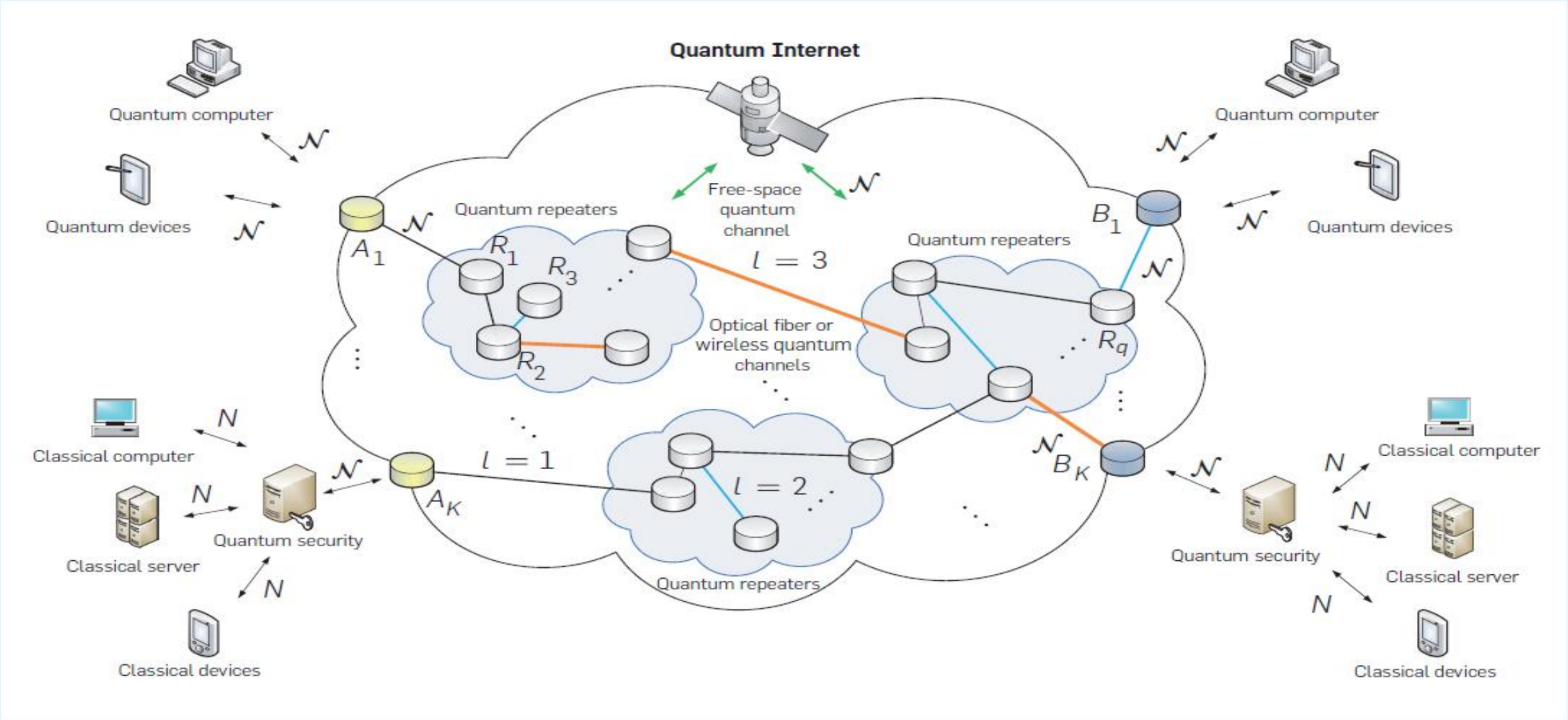

- The Quantum Internet will extend quantum communication worldwide by networking quantum devices and transmitting information as qubits—the fundamental units of quantum states—rather than classical bits.
- Its greatest advantage is ultra-secure communication, made possible by quantum entanglement and the fact that any interception of quantum data immediately disturbs the transmission and signals eavesdropping.
- Advanced protocols such as quantum teleportation and device-independent QKD are enabled by entanglement, allowing secure, global connectivity as well as linking quantum computers for distributed processing.

- Building such a network is highly challenging because quantum signals degrade over long distances and cannot be cloned; quantum repeaters based on entanglement swapping and quantum memory are therefore essential to extend range and fidelity.
- Active research and infrastructure projects, including satellite-based demonstrations, are advancing this frontier.
- Once realized, the quantum internet will transform fields like banking, voting, cloud quantum computing, and encryption, offering unprecedented security and computational capabilities.

4.5.1. What Is the Quantum Internet?

- **A proposed global network that uses quantum communication protocols to transmit qubits instead of classical bits.**
- **It connects quantum devices (like sensors, computers, and communication nodes) using principles of quantum mechanics—mainly entanglement and superposition.**

4.5.2. Core Technologies

- **Qubits: Basic units of quantum information (photons, ions, electrons).**
- **Quantum Entanglement: Allows distant qubits to be correlated in a way that classical systems can't replicate.**
- **Quantum Teleportation: Transfers quantum states across the network using entangled particles.**
- **Quantum Repeaters: Special nodes that extend communication distances by performing entanglement swapping and storing qubit states in quantum memory.**

4.5.3. Unbreakable Security

- Quantum Key Distribution (QKD): Enables users to exchange encryption keys securely.
- Eavesdropping alters the quantum state, making intrusion detectable.
- Prevents cyber-attacks like man-in-the-middle or signal interception that are common on the classical internet.

4.5.4. Applications of the Quantum Internet

- Secure Communication: Military, government, and corporate data can be transmitted without risk of decryption.
- Quantum Cloud Computing: Remote users access quantum computing resources via entangled connections.
- Quantum Sensor Networks: Synchronizing ultra-precise quantum sensors over large distances for environmental monitoring or space exploration.
- Tamper-Proof Voting & Financial Transactions: Trustless systems using quantum protocols to ensure integrity.

4.5.5. Global Developments and Initiatives

- China's Micius Satellite: Demonstrated QKD between ground stations 1,200 km apart via satellite.
- EU's Quantum Flagship Program: Investing heavily in quantum network research.
- U.S. Quantum Internet Blueprint: A federal strategy to build a national quantum communication backbone.

4.5.6. Challenges to Realization

- **Quantum Signal Loss: Photons lose energy and coherence over long distances in fiber optics.**
- **No-Cloning Theorem: Quantum data cannot be copied, so traditional amplifiers/repeaters don't work.**
- **Scalability: Developing stable, affordable, and room-temperature quantum devices for large-scale deployment.**
- **Standardization: Lack of unified protocols and architecture across global research and industries.**

4.5.7. The Future Vision

- A fully secure, tamper-proof internet with global reach.
- The merging of classical networks and quantum backbones, creating hybrid communication systems.
- Connecting quantum computers, quantum sensors, and quantum users around the world to form the foundation of a new digital age.

4.6 Quantum Computing

- Quantum computing uses the principles of quantum mechanics to process information in ways impossible for classical computers. Instead of bits, it uses qubits that can exist in superposition (both 0 and 1 simultaneously) and become entangled, linking their states across distance.
- These properties allow quantum computers to perform parallel computations and solve certain problems, like large-number factorization, far faster than classical systems.
- Although still developing and limited by decoherence and error rates, quantum computing promises breakthroughs in cryptography, optimization, AI, drug discovery, and materials science.

Quantum Parallelism (Many States at Once)

- One of the most powerful concepts in quantum computing is quantum parallelism, which refers to a quantum system's ability to evaluate multiple input states simultaneously. This is possible because of superposition, where a qubit can exist in a combination of both $|0\rangle$ and $|1\rangle$ states at once. When multiple qubits are in superposition, the system represents a vast number of combinations at the same time. For example, a 3-qubit system in superposition can represent all 8 (2^3) possible combinations of bits at once.
- This parallelism allows quantum algorithms to explore a large solution space in a fraction of the time it would take a classical computer. However, the real power of quantum parallelism lies not just in evaluating many states simultaneously, but in using interference and entanglement to amplify correct answers and cancel out incorrect ones. This principle is crucial in quantum algorithms like Grover's search algorithm, which finds an item in an unsorted database in $\sqrt{N}$ steps instead of N steps. It's important to note that we can't directly read out all the parallel states—measurement collapses the system, so the trick lies in carefully designing algorithms to extract useful outcomes from the superposition.

4.8 Classical vs Quantum Gates:

- **Classical Gates:**
  - Operate on bits (0 or 1).
  - Perform deterministic logical operations like AND, OR, NOT.
  - Can be irreversible (cannot recover input from output).
  - Process information using electrical circuits.
  - Manipulate binary states only.
- **Quantum Gates:**
  - Operate on qubits ($|0\rangle$, $|1\rangle$, or superpositions).
  - Perform reversible, unitary transformations.
  - Include gates like Hadamard (puts qubit in superposition), Pauli-X (quantum NOT), and CNOT (entangles two qubits).
  - Can perform complex operations like rotating qubit states on the Bloch sphere.
  - Must be reversible (input can always be deduced from output), preserving quantum information.

- Quantum circuits consist of a sequence of quantum gates. These enable quantum algorithms that outperform classical ones for certain tasks due to superposition and entanglement.

Feature	Classical Gates	Quantum Gates
Operate On	Bits (0 or 1)	Qubits (superpositions)
Examples	AND, OR, NOT, NAND	Hadamard, Pauli-X, CNOT, T-gate
Reversibility	Often irreversible	Always reversible (unitary operations)
State Representation	Binary states	Complex vectors on the Bloch sphere
Information Preservation	Not always preserved	Always preserved (no information loss)
Entanglement Capability	Not possible	Possible with multi-qubit gates
Parallelism	No (sequential processing)	Yes (superposition + interference)

- **Hadamard Gate (H): Creates superposition.**
- **Pauli-X Gate: Equivalent to classical NOT.**
- **CNOT Gate: Conditional operation that can entangle qubits.**
- **Quantum Circuits: Built by combining quantum gates; analogous to classical logic circuits but exponentially more powerful for certain tasks.**

Decoherence and Error Correction in Quantum Computing Explained

- Decoherence is a major challenge in quantum computing where qubits lose their delicate quantum properties (superposition and entanglement) because they interact with the environment. This interaction causes the quantum information to leak and behave more like classical bits, making quantum computations inaccurate or impossible.
- Qubits are extremely fragile: vibrations, temperature changes, electromagnetic interference, and even cosmic rays can cause them to decohere.
- Decoherence limits how long quantum computations can run reliably, increasing error rates.
- Because qubits lose coherence quickly (usually in microseconds to milliseconds), computations must be fast to be successful.

- **Quantum Error Correction (QEC)**
- QEC encodes logical qubits using many physical qubits entangled together, allowing detection and correction of errors without collapsing the quantum state.
- Popular QEC codes like the Shor Code and Surface Code protect against common quantum errors like bit-flips and phase-flips.
- However, QEC requires many physical qubits per logical qubit (often hundreds or thousands), making quantum computers larger and more complex.
- **Fault-tolerant quantum computing will only be possible when reliable QEC is fully implemented.**

4.6 Quantum computing

- **Quantum computing** is a revolutionary computing paradigm that uses quantum mechanics to process information differently from classical computers. Instead of classical bits that are either 0 or 1, quantum computers use qubits that can exist in a superposition of states, allowing many calculations to be done simultaneously.
- Qubits can also be entangled, meaning the state of one qubit instantly influences the state of another, regardless of distance.
- This enables quantum computers to solve specific problems much faster than classical computers, such as factoring large numbers with Shor's algorithm.
- Despite its promise in cryptography, optimization, and drug discovery, quantum computing faces challenges like decoherence, high error rates, and the requirement for extremely low temperatures to function effectively.

4.7 Quantum Parallelism (Many States at Once)

- Quantum parallelism is the ability of quantum computers to process and evaluate many possible states or computational paths simultaneously due to the principle of superposition.
- Where a classical bit is in either state 0 or 1, a quantum bit (qubit) can be in a linear combination of both, and a system of n qubits can encode all 2^n possible combinations at once.
- When quantum operations (unitary transformations) are applied, they act on all these states in parallel, effectively evaluating a function on every input simultaneously

Superposition and Parallelism

- Superposition allows each qubit to represent both 0 and 1 concurrently.
- For n qubits, a quantum system can represent all 2^n classical bit strings at once; for instance, 3 qubits represent 8 states simultaneously.

Usage in Quantum Algorithms

- Grover's algorithm leverages quantum parallelism and interference to search an unsorted database in $\sqrt{N}$ steps, unlike the classical N steps.
- Shor's algorithm for factoring uses quantum parallelism in conjunction with the quantum Fourier transform to achieve exponential speedup.
- The power of quantum parallelism is amplified by entanglement and interference, which allow quantum algorithms to suppress incorrect answers and boost the probability of correct ones.

- **Quantum parallelism enables quantum computers to tackle certain problems far more efficiently than classical computers, but its real advantage comes from combining parallelism with quantum interference and entanglement to extract meaningful answers efficiently.**

4.8 Classical and quantum gates

- **Classical and quantum gates differ fundamentally in how they process information and their operational principles.**
- **Nature of Information Processed**
- **Classical gates operate on bits, which are binary and deterministic, existing as either 0 or 1.**
- **Quantum gates operate on qubits, which can be in superposition states (a combination of $|0\rangle$ and $|1\rangle$) simultaneously due to quantum mechanics.**

Reversibility

- **Classical gates like AND, OR are often irreversible, meaning the input cannot always be recovered from the output, leading to information loss.**
- **Quantum gates are fundamentally reversible; they are described by unitary transformations that preserve information and can be undone.**

Feature	Classical Gates	Quantum Gates
Operate On	Bits (0 or 1)	Qubits (superpositions)
Examples	AND, OR, NOT, NAND	Hadamard, Pauli-X, CNOT, T-gate
Reversibility	Often irreversible	Always reversible (unitary operations)
State Representation	Binary states	Complex vectors on the Bloch sphere
Information Preservation	Not always preserved	Always preserved (no information loss)
Entanglement Capability	Not possible	Possible with multi-qubit gates
Parallelism	No (sequential processing)	Yes (superposition + interference)

- **Hadamard Gate (H): Creates superposition.**
- **Pauli-X Gate: Equivalent to classical NOT.**
- **CNOT Gate: Conditional operation that can entangle qubits.**
- **Quantum Circuits: Built by combining quantum gates; analogous to classical logic circuits but exponentially more powerful for certain tasks.**

4.9 Challenges: Decoherence and Error Correction

- **Decoherence** is the loss of quantum information due to unwanted interaction between qubits and their environment; it destroys quantum superpositions and entanglement, creating a major hurdle for reliable quantum computation.
- **Quantum error correction (QEC)** is the essential strategy for overcoming both decoherence and operational errors, but it requires many physical qubits to encode a single fault-tolerant logical qubit.

What Causes Decoherence?

- **Environmental Interactions**: Qubits couple to factors like temperature, electromagnetic interference, and vibrations, all of which can disrupt fragile quantum states.
- **Quantum Noise/Defects**: Material imperfections such as charge or flux noise especially affect superconducting circuits, while random events like cosmic rays also contribute.
- **Measurement and Crosstalk**: Direct measurement and unwanted interactions with other qubits or circuitry can induce decoherence.

Impact on Quantum Computing

- **Loss of Superposition/Entanglement**: Decoherence makes qubits behave classically, thus erasing computational advantages offered by quantum states.
- **Limits on Computation Time**: Quantum algorithms must be completed within the brief window before decoherence sets in; coherence times are typically microseconds to milliseconds for matter qubits.
- **Increased Error Rates**: Faulty gates and readouts, amplified by decoherence, raise the overall system error rate and limit scalability.

Quantum Error Correction (QEC)

- **No-Cloning Theorem**: Classical error correction copies information, but quantum mechanics prohibits direct copying of quantum data; QEC instead uses entangled multi-qubit logical states.
- **Popular Codes**: Shor Code, Surface Code, and others are engineered to correct bit-flip and phase-flip errors without collapsing the superposition.
- **Scalability Barrier**: Fault-tolerant quantum computing requires hundreds or thousands of physical qubits to protect a single logical qubit, greatly increasing hardware complexity and operational requirements.

Mitigation Strategies

- Cryogenic cooling, electromagnetic shielding, robust hardware design, dynamical decoupling, and continuous development of efficient error correction codes are central efforts to prolong coherence and enable reliable quantum computing.
- Photonic systems benefit from lower decoherence rates, making them attractive for certain quantum applications.

4.7.1. Challenge: Decoherence

- Definition: Decoherence is the loss of quantum coherence when a qubit interacts with its environment.
- Causes: Environmental noise, temperature fluctuations, magnetic fields, radiation, material imperfections.
- Effect: Qubits lose their quantum behavior (superposition and entanglement), leading to errors.
- Impact: Limits computation time and makes quantum results unreliable if not corrected.

4.7.2. Challenge: Quantum Error Correction (QEC)

- Problem: Quantum states cannot be copied (no-cloning theorem), so classical error correction methods don't work.
- Solution: Use redundant encoding of quantum information in logical qubits built from multiple physical qubits.
- **Popular Methods:**
- Shor Code – Encodes 1 logical qubit into 9 physical qubits.
- Surface Code – Highly fault-tolerant, scalable architecture requiring fewer operations.
- Complexity: Requires enormous overhead—hundreds or thousands of physical qubits for one logical qubit.
- Goal: Achieve fault-tolerant quantum computing that can operate reliably even with noise and hardware imperfections.

4.8.Real-World Importance and Future Potential

- **Quantum computing is poised to revolutionize multiple industries by solving problems that are intractable for classical computers, ushering in a new era of computational possibilities.**
- **Its potential spans from pharmaceuticals and finance to cybersecurity, logistics, energy, and beyond, making it one of the most transformative technologies on the horizon**

4.8.1 Real-World Importance

- Healthcare: Molecular modeling for drug discovery, protein folding, personalized medicine.
- Finance: Portfolio optimization, market simulation, fraud detection, real-time decision making.
- Logistics: Route optimization, supply chain modeling, dynamic scheduling.
- Cybersecurity: Quantum-safe encryption and secure communication using quantum key distribution (QKD).
- AI and ML: Speeding up training of models, improving pattern recognition, enhancing data analysis.

4.8.2. Future Potential

- Quantum Internet: Enables secure, high-speed, global quantum communication and networking.
- Materials Science: Simulating new materials for superconductors, batteries, solar cells.
- Climate Science: Enhances simulation models for weather, climate, and environmental changes.
- National Security: Protecting critical infrastructure with quantum encryption, predicting and countering threats.
- Economic Growth: Opens new industries, job roles, and research domains with high innovation potential.